ENGINEERED TO FIT ¾" THROUGH 1" BACKFLOW PREVENTION DEVICE INSTALLATIONS

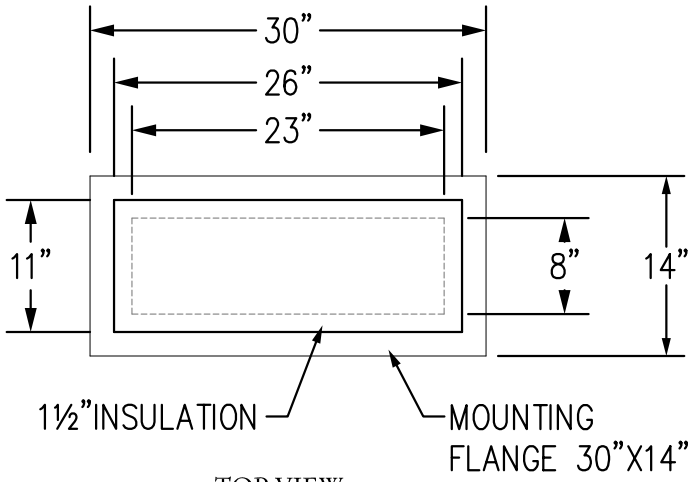

TOP VIEW
NOT TO SCALE

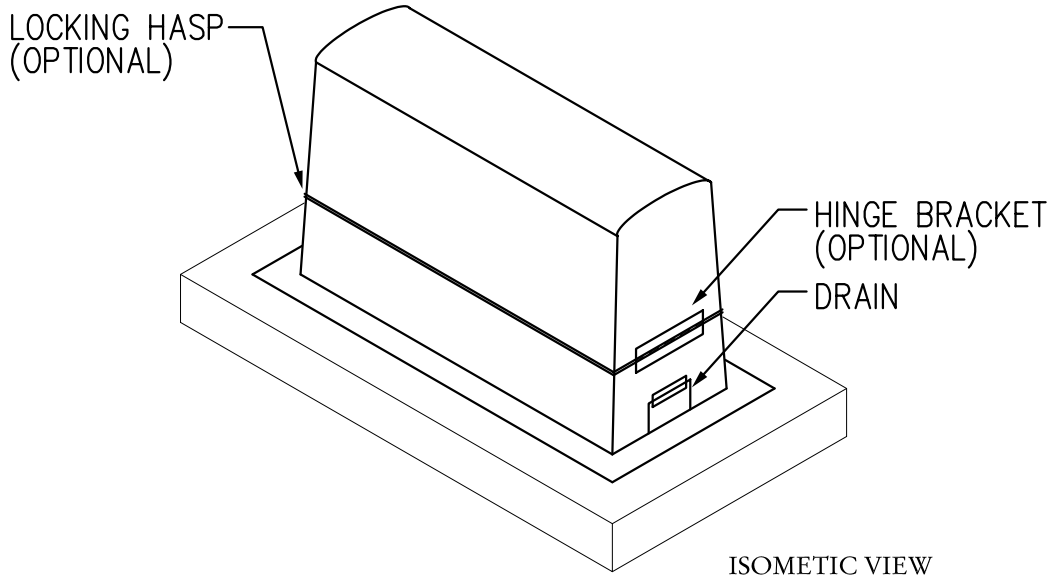

ISOMETIC VIEW
NOT TO SCALE

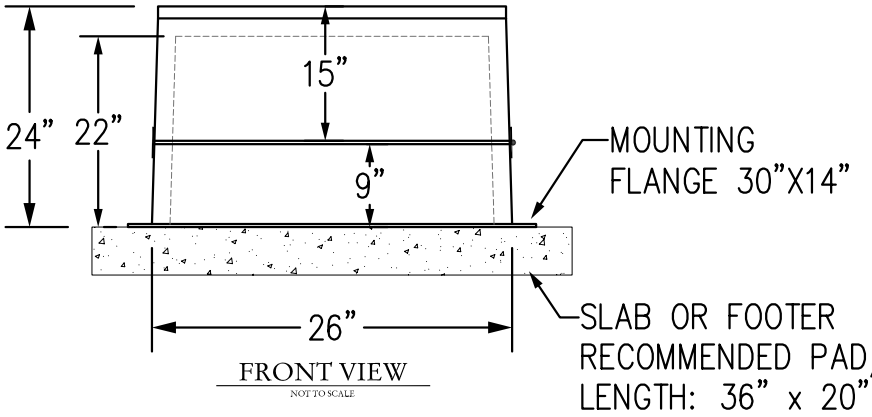

FRONT VIEW
NOT TO SCALE

SPECIFICATION:
BFProducts Inc. enclosures are manufacturered to ASSE–1060 standards and designed to be used to help protect Backflow Prevention Devices from freezing conditions and vandalism. Factory assembled construction will include a gelcoat shell backed with chop–strand polyresin bonded fiberglass, internally insulated using polyurethane spray–foam.
WEIGHT: 19 LBS

Options:
- ☐ –H40 – Heat Source – HEAT TAPE
- ☐ – L37 – Pad lockable hasp and hinge connection for two piece assembly.
- ☐ – T–TURF – Turf installations require elevated discharge drain to facility

ASSE–1060 flange bury

BFPRODUCTS
CORPORATE OFFICE
P.O. BOX 242771
CHARLOTTE, NC 28224

PHONE: (704) 599-9407
FAX: (704 599-0595
EMAIL: bfproducts@qmarketing.biz
WEBSITE: WWW.BFPRODUCTS.BIZ

BFProducts, Inc
Backflow Prevention Device Enclosures
"We've Got You Covered"

FIBERGLASS ENCLOSURE
MODEL # 232–APD
Submittal Sheet

SHEET NO.
08/22/09
232–APD